NOTES : INSTALL COMPRESSION STRUT AT 12 FT. x 8 FT. O.C. EACH DIRECTION OR EVERY 96 SQUARE FEET OF CEILING AREA PER U.B.C. CHAPTER 16. LOCATE AT SPLAY WIRE LOCATIONS.

METAL SUSPENSION SYSTEMS FOR ACOUSTICAL TILE AND FOR LAY-IN PANEL CEILINGS SHALL BE INSTALLED IN ACCORDANCE WITH ASTM C 635 AND ASTM C 636 PER CBC 803.9.1.1.

HANGERS FOR SUSPENDED CEILINGS SHALL BE NOT LESS THAN THAT SET FORTH IN UBC. FASTENED TO OR EMBEDDED IN THE STRUCTURAL FRAMES, MASONRY OR CONCRETE. HANGERS SHALL BE SADDLE-TIED AROUND MAIN RUNNERS TO DEVELOP THE FULL STRENGTH OF THE HANGERS. LOWER ENDS OF FLAT HANGERS SHALL BE BOLTED WITH 1 1/2" BOLTS TO THE RUNNER CHANNELS OR BENT TIGHTLY AROUND RUNNERS AND BOLTED TO THE MAIN PART OF THE HANGERS.

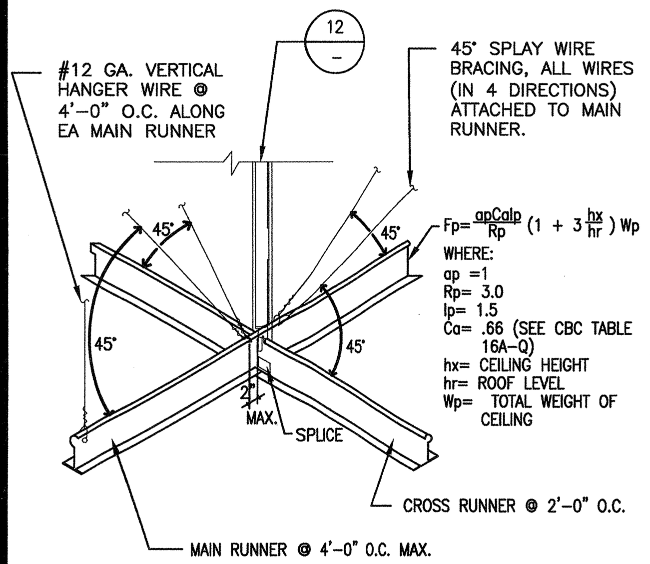

$F_p = \frac{a_p C_a I_p}{R_p}\left(1 + 3\frac{h_x}{h_r}\right) W_p$

WHERE:
ap =1
Rp= 3.0
Ip= 1.5
Ca= .66 (SEE CBC TABLE 16A-Q)
hx= CEILING HEIGHT
hr= ROOF LEVEL
Wp= TOTAL WEIGHT OF CEILING

TYP. SPLAY BRACING DETAIL-SUSPENDED CEILING SYSTEM

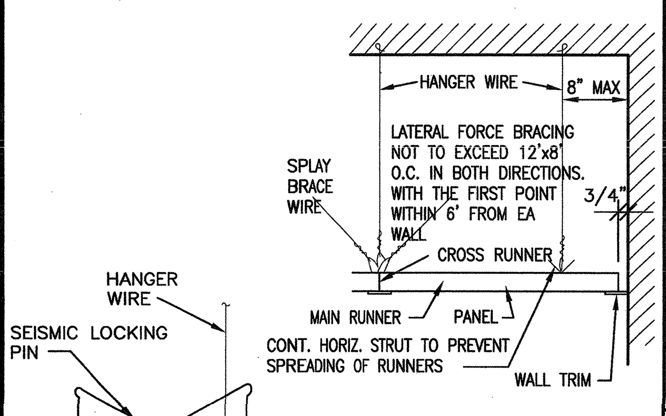

SUSPENDED CEILING DETAIL AT WALL

HANGER WIRE	ALLOW. TENSION
#12	170#
11	225#
10	300#

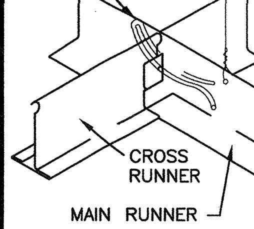

LOCKING CLIP TO FASTEN CROSS RUNNER TO MAIN RUNNER

SPLICES AND INTERACTIONS OF RUNNERS SHALL BE ATTACHED WITH MECHANICAL INTERLOCKING CONNECTORS SUCH AS RIVETS, SCREWS, PINS, PLATES WITH BENT TABS, OR OTHER APPROVED CONNECTORS. DESIGN CONNECTORS FOR 2# DESIGN LOAD OR ULTIMATE AXIAL TENSION OR COMPRESSION (MINIMUM 60 POUNDS) OR, CROSS-FURRING SHALL BE SECURELY ATTACHED TO THE MAIN RUNNER BY MEDIA TYING WITH NOT LESS THAN ONE STRAND OF NO. 16 OR TWO STRANDS OF NO 18 U.S. GAUGE TIE WIRE OR APPROVED EQUIVALENT ATTACHMENTS.

RUNNERS AND FURRING. THE MAIN RUNNER AND FURRING SHALL BE NOT LESS THAN THE SIZES SET FORTH IN U.B.C. EXCEPT THAT OTHER STEEL SECTIONS OF EQUIVALENT STRENGTH MAY BE SUBSTITUTED FOR THAT SET FORTH IN THIS TABLE.

SUSPENDED CEILING — SCALE: NONE — 15

D075

1. #12 GA. (MIN.) HANGER WIRES MAY BE USED FOR UP TO AND INCLUDING 4'-0" BY 4'-0" GRID SPACING ALONG MAIN RUNNERS. SPLICES WILL NOT BE PERMITTED IN ANY HANGER WIRES UNLESS SPECIALLY APPROVED.
2. PROVIDE #12 GA. HANGER WIRES AT THE ENDS OF ALL MAIN AND CROSS RUNNERS WITHIN EIGHT INCHES (8") OF THE SUPPORT OR WITHIN 1/4 OF THE LENGTH OF THE END TEE, WHICHEVER IS LEAST, FOR THE PERIMETER OF THE CEILING AREA. END CONNECTIONS FOR RUNNERS WHICH ARE DESIGNED AND DETAILED TO RESIST THE APPLIED HORIZONTAL FORCES MAY BE USED IN LIEU OF THE #12 GA. HANGER WIRES SUBJECT TO REVIEW AND APPROVAL.
3. PROVIDE TRAPEZE OR OTHER SUPPLEMENTARY SUPPORT MEMBERS AT OBSTRUCTIONS TO TYPICAL HANGER SPACING. PROVIDE ADDITIONAL HANGERS, STRUTS OR BRACES AS REQUIRED AT ALL CEILING BREAKS, SOFFITS OR DISCONTINUOUS AREAS. HANGER WIRES THAT ARE MORE THAN 1 IN 6 OUT OF PLUMB ARE TO HAVE COUNTER-SLOPING WIRES.
4. CEILING GRID MEMBERS MAY BE ATTACHED TO NOT MORE THAN TWO (2) ADJACENT WALLS. CEILING GRID MEMBERS SHOULD BE AT LEAST 3/4 INCH CLEAR OF OTHER WALLS. IF WALLS RUN DIAGONALLY TO CEILING GRID SYSTEM RUNNERS, ONE END OF MAIN AND CROSS RUNNERS SHOULD BE FREE AND A MINIMUM OF 3/4 INCH CLEAR OF WALL.
5. AT THE PERIMETER OF THE CEILING AREA WHERE MAIN OR CROSS RUNNERS ARE NOT CONNECTED TO THE ADJACENT WALL, PROVIDE INTERCONNECTION BETWEEN THE RUNNERS AT THE FREE END TO PREVENT LATERAL SPREADING. A METAL STRUT OR A #16 GA. WIRE WITH A POSITIVE MECHANICAL CONNECTION TO THE RUNNER MAY BE USED. WHERE THE PERPENDICULAR DISTANCE FROM THE WALL TO THE FIRST PARALLEL RUNNER IS 12" OR LESS, THIS INTERLOCK IN NOT REQUIRED.
6. PROVIDE BRACING ASSEMBLIES CONSISTING OF A COMPRESSION STRUT AND FOUR (4) #12 GAGE SPLAYED BRACING WIRES ORIENTED 90 DEGREES FROM EACH OTHER AT THE FOLLOWING SPACING:
6.1. FOR ESSENTIAL SERVICES BUILDINGS, PLACE BRACING ASSEMBLIES NOT MORE THAN 8 FEET BY 12 FEET ON CENTER.
6.2. PROVIDE BRACING ASSEMBLIES AT LOCATIONS NOT MORE THAN ONE HALF (1/2) THE SPACINGS GIVEN ABOVE, FROM EACH PERIMETER WALL AND AT THE EDGE OF VERTICAL CEILING OFFSETS.
THE SLOPE OF THESE WIRES SHALL NOT EXCEED 45 DEGREES FROM THE PLANE OF THE CEILING AND SHOULD BE TAUT WITHOUT CAUSING THE CEILING TO LIFT. SPLICES IN BRACING WIRES ARE NOT TO BE PERMITTED WITHOUT SPECIAL APPROVAL.
6.3. SUSPENDED ACOUSTICAL CEILING SYSTEMS WITH A CEILING AREA OF 144 SQUARE FEET OR LESS, AND FIRE RATED SUSPENDED ACOUSTICAL CEILING SYSTEMS WITH A CEILING AREA OF 96 SQUARE FEET OR LESS, SURROUNDED BY WALLS WHICH CONNECT DIRECTLY TO THE STRUCTURE ABOVE, DO NOT REQUIRE BRACING ASSEMBLIES WHEN ATTACHED TO TWO ADJACENT WALLS.
7. FASTEN HANGER WIRES WITH NOT LESS THAN THREE (3) TIGHT TURNS. FASTEN BRACING WIRES WITH 4 TIGHT TURNS. MAKE ALL TIGHT TURNS WITHIN A DISTANCE OF 1-1/2 INCHES. HANGER OR BRACING WIRE ANCHORS TO THE STRUCTURE SHOULD BE INSTALLED IN SUCH A MANNER THAT THE DIRECTION OF THE ANCHOR ALIGNS AS CLOSELY AS POSSIBLE WITH THE DIRECTION OF THE FORCES ACTING ON THE WIRE.
NOTE: WIRE TURNS MADE BY MACHINE WHERE BOTH STRANDS HAVE BEEN DEFORMED OR BENT IN WRAPPING CAN WAVE THE 1-1/2" REQUIREMENT, BUT THE NUMBER OF TURNS SHOULD BE MAINTAINED AND BE AS TIGHT AS POSSIBLE.
8. SEPARATE ALL CEILING HANGING AND BRACING WIRES AT LEAST 6 INCHES FROM ALL UNBRACED DUCTS, PIPES, CONDUIT, ETC. IT IS ACCEPTABLE TO ATTACH LIGHTWEIGHT ITEMS, SUCH AS SINGLE ELECTRICAL CONDUIT NOT EXCEEDING 3/4" NOMINAL DIAMETER, TO HANGER WIRES USING CONNECTORS ACCEPTABLE TO OSHPD.
9. WHEN DRILLED-IN CONCRETE ANCHORS OR SHOT-IN ANCHORS ARE USED IN REINFORCED CONCRETE FOR HANGER WIRES, 1 OUT OF 10 MUST BE FIELD TESTED FOR 200 POUNDS IN TENSION. WHEN DRILLED-IN CONCRETE ANCHORS ARE USED FOR BRACING WIRES, 1 OUT OF 2 MUST BE FIELD TESTED FOR 440 POUNDS IN TENSION. SHOT-IN ANCHORS IN CONCRETE ARE NOT PERMITTED FOR BRACING WIRES. IF ANY SHOT-IN OR DRILLED-IN ANCHOR FAILS, SEE SECTION 1916A.8 TITLE 24.
NOTE: DRILLED-IN OR SHOT-IN ANCHORS REQUIRE SPECIAL APPROVAL WHEN USED IN PRESTRESSED CONCRETE.

WHEN INSTALLING DRILLED-IN ANCHORS AND / OR POWDER DRIVEN PINS IN EXISTING NON-PRESTRESSED REINFORCED CONCRETE, USE CARE AND CAUTION TO AVOID CUTTING OR DAMAGING THE EXISTING REINFORCING BARS. WHEN INSTALLING THEM INTO EXISTING PRESTRESSED CONCRETE (PRE- OR POSTTENSIONED) LOCATE THE PRESTRESSED TENDONS BY USING A NONDESTRUCTIVE METHOD PRIOR TO INSTALLATION. EXERCISE EXTREME CARE AND CAUTION TO AVOID CUTTING OR DAMAGING THE TENDONS DURING INSTALLATION. MAINTAIN A MINIMUM CLEARANCE OF ONE INCH BETWEEN THE REINFORCEMENT AND THE DRILLED-IN ANCHOR AND / OR PIN.

10. ATTACH ALL LIGHT FIXTURES AND CEILING MOUNTED AIR TERMINALS, TO THE CEILING GRID RUNNERS TO RESIST A HORIZONTAL FORCE EQUAL TO THE WEIGHT OF THE FIXTURES. SCREWS OR APPROVED FASTENERS ARE REQUIRED.
11. ALL RECESSED OR DROP-IN LIGHT FIXTURES AND GRILLES SHALL BE SUPPORTED DIRECTLY FROM THE FIXTURE HOUSING TO THE STRUCTURE ABOVE WITH A MINIMUM OF TWO 12-GAGE WIRES LOCATED AT DIAGONALLY OPPOSITE CORNERS. LEVELING AND POSITIONING OF FIXTURES MAY BE PROVIDED BY THE CEILING GRID. FIXTURE SUPPORT WIRES MAY BE SLIGHTLY LOOSE TO ALLOW THE FIXTURE TO SEAT IN THE GRID SYSTEM. FIXTURES SHALL NOT BE SUPPORTED FROM MAIN RUNNERS OR CROSS RUNNERS IF THE WEIGHT OF THE FIXTURES CAUSES THE TOTAL DEAD LOAD TO EXCEED THE DEFLECTION CAPABILITY OF THE CEILING SUSPENSION SYSTEM.

FIXTURES SHALL NOT BE INSTALLED SO THAT THE MAIN RUNNERS OR CROSS RUNNERS WILL BE ECCENTRICALLY LOADED. SURFACE-MOUNTED FIXTURES SHALL BE ATTACHED TO THE MAIN RUNNER WITH AT LEAST TWO POSITIVE CLAMPING DEVICES MADE OF MATERIAL WITH A MINIMUM OF 14 GAGE. ROTATIONAL SPRING CATCHES DO NOT COMPLY. A 12-GAGE SUSPENSION WIRE SHALL BE ATTACHED TO EACH CLAMPING DEVICE AND TO THE STRUCTURE ABOVE.

FLUSH OR RECESSED LIGHT FIXTURES AND AIR TERMINALS, WEIGHING LESS THAN 56 POUNDS MAY BE SUPPORTED DIRECTLY ON, THE RUNNERS OF A HEAVY DUTY GRID SYSTEM BUT, IN ADDITION, THEY MUST HAVE MINIMUM OF TWO (2) #12 GA. SLACK SAFETY WIRES ATTACHED TO THE FIXTURE AT DIAGONAL CORNERS AND ANCHORED TO THE STRUCTURE ABOVE. ALL 4 FT. X 4 FT. LIGHT FIXTURES MUST HAVE SLACK SAFETY WIRES AT EACH CORNER. ALL FLUSH OR RECESSED LIGHT FIXTURES AND AIR TERMINALS, WEIGHING 56 POUNDS OR MORE MUST BE INDEPENDENTLY SUPPORTED BY NOT LESS THAN FOUR (4) TAUT #12 GA. WIRES, EACH ATTACHED TO THE FIXTURE AND TO THE STRUCTURE ABOVE REGARDLESS OF THE TYPE OF CEILING GRID SYSTEM USED. THE FOUR (4) TAUT #12 GA. WIRES INCLUDING THEIR ATTACHMENT TO THE STRUCTURE ABOVE MUST BE CAPABLE OF SUPPORTING FOUR (4) TIMES THE WEIGHT OF THE UNIT. (2)

12. ALL FIXTURES AND AIR TERMINALS SUPPORTED ON INTERMEDIATE DUTY GRID SYSTEMS MUST BE INDEPENDENTLY SUPPORTED BY NOT LESS THAN FOUR (4) TAUT #12 GA. WIRES EACH ATTACHED TO THE FIXTURE OR TERMINA

'RTS WHEN LIGHT FIXTURES ARE 8 FEET OR LONGER.

14. SUPPORT PENDANT MOUNTED LIGHT FIXTURES DIRECTLY FROM THE STRUCTURE ABOVE WITH HANGER WIRES OR CABLES PASSING THROUGH EACH PENDANT HANGER AND CAPABLE OF SUPPORTING FOUR (4) TIMES THE WEIGHT OF THE FIXTURE. A BRACING ASSEMBLY IS REQUIRED WHERE THE PENDANT HANGER PENETRATES THE CEILING. SPECIAL DETAILS ARE REQUIRED TO ATTACH THE PENDANT HANGER TO THE BRACING ASSEMBLY TO TRANSMIT HORIZONTAL FORCES.
15. A HEAVY DUTY T-BAR GRID SYSTEM SHALL BE USED.
16. THE WIDTH OF THE PERIMETER SUPPORTING CLOSURE ANGLE SHALL BE NOT LESS THAN 2.0 INCHES (50 mm). IN EACH ORTHOGONAL HORIZONTAL DIRECTION, ONE END OF THE CEILING GRID SHALL BE ATTACHED TO THE CLOSURE ANGLE. THE OTHER END IN EACH HORIZONTAL DIRECTION SHALL HAVE A 0.75 (19 mm) IN CLEARANCE FROM THE WALL AND SHALL REST UPON AND BE FREE TO SLIDE ON A CLOSURE ANGLE.
17. FOR CEILING EXCEEDING 1,000 FT.^{2} (92.9 m^2), HORIZONTAL RESTRAINT OF THE CEILING TO THE STRUCTURAL SYSTEM SHALL BE PROVIDED. THE TRIBUTARY AREAS OF THE HORIZONTAL RESTRAINTS SHALL BE APPROXIMATELY EQUAL.
18. EXCEPT WHERE RIGID BRACES ARE USED TO LIMIT LATERAL DEFLECTIONS, SPRINKLERS HEADS AND OTHER PENETRATIONS SHALL HAVE A 2 IN, (50 mm) OVERSIZE RING, SLEEVE, OR ADAPTER THROUGH THE CEILING TILE TO ALLOW FOR FREE MOVEMENT OF AT LEAST 1 IN. (25 mm) IN ALL HORIZONTAL DIRECTION.
19. SUSPENDED CEILING SHALL BE SUBJECT TO THE SPECIAL INSPECTION REQUIREMENTS OF SECTION 11A.1.3.9 OF THIS STANDARD.
20. ARMSTRONG PRELUDE 15/16, CLASSIFICATON OF CEILING GRID IS HEAVY DUTY.
MANUFACTURER'S CATALOG NUMBER - MAIN RUNNER, #7301.
MANUFACTURER'S CATALOG NUMBER - CROSS RUNNER, #7380
MANUFACTURER'S CATALOG NUMBER OF DETAIL FOR RUNNER SPLICE

ICC-ES EVALUATION REPORT: ESR-1308.

ADDITIONAL REQUIREMENTS FOR FIRE RATED CEILINGS:

1. PROVIDE UNDERWRITER LABORATORY (U.L.) DESIGN NUMBER OR STATE FIRE MARSHALL (SFM) LISTING NUMBER. THE COMPONENTS AND INSTALLATION DETAILS MUST CONFORM IN EVERY RESPECT WITH THE U.L. OR SFM APPROVAL FOR THE DESIGN NUMBER SPECIFIED. CUSTOM DESIGNS WHICH COMBINE COMPONENTS FROM DIFFERENT APPROVED DESIGNS BUT HAVE NOT BEEN TESTED AS A COMPLETE ASSEMBLY ARE NOT ACCEPTABLE.
2. FOR SCHOOLS AND ESSENTIAL SERVICES BUILDINGS, BRACING ASSEMBLIES ARE REQUIRED FOR EACH 96 SQUARE FEET. THE FIRST BRACING ASSEMBLY IS REQUIRED NOT MORE THAN FOUR (4) FEET FROM EACH WALL. A MINIMUM OF ONE BRACING ASSEMBLY IS REQUIRED BETWEEN ANY TWO ADJACENT EXPANSION CUT-OUTS ON RUNNERS BEING BRACED.
3. POP RIVETS, SCREWS, OR OTHER ATTACHMENTS ARE NOT ACCEPTABLE UNLESS SPECIFICALLY DETAILED ON THE DRAWINGS AND APPROVED BY U.L. AND SFM.

ADDITIONAL REQUIREMENTS FOR METAL PANELS:

1. METAL PANELS AND PANELS WEIGHING MORE THAN 1/2psf, OTHER THAN ACOUSTICAL TILE, ARE TO BE POSITIVELY ATTACHED TO THE CEILING SUSPENSION RUNNERS.

SUSPENDED ACOUSTICAL CEILINGS BELOW GYPSUM BOARD CEILINGS:

1. WHERE GYPSUM BOARD OR OTHER CEILING FINISHES ARE ATTACHED TO THE FRAMING, SPECIAL DETAILS WILL BE REQUIRED FOR THE VERTICAL HANGER WIRE AND LATERAL BRACING WIRE SUPPORT CONNECTORS TO THE FRAMING.

REUSE OF EXISTING CEILING HANGER WIRES AND SPLAY WIRES:

1. THE GAGE AND SPACING OF THE WIRES MUST COMPLY WITH THE CURRENT APPLICABLE CODES.
2. ALL EXISTING CEILING HANGER WIRES MUCH BE FIELD TESTED TO 200 LBS. IN TENSION.
3. ALL EXISTING SPLAYED BRACING WIRES MUCH BE FIELD TESTED TO 440 LBS. IN TENSION.
4. IF A NEW WIRE IS TO BE SPLICED TO AN EXISTING WIRE, THE FOLLOWING IS REQUIRED:
4.1. THE ARCHITECT OR STRUCTURAL ENGINEER IN GENERAL RESPONSIBLE CHARGE MUST REVIEW A DETAIL AND SPECIFICATION DESCRIBING HOW THE SPLICE IS TO BE MADE.
4.2. ALL NEW WIRES, AFTER BEING SPLICED TO THE EXISTING WIRES, MUST BE FIELD TESTED PER ITEMS 2 AND 3 ABOVE.
4.3. ALL FIELD TESTS MUST BE PERFORMED IN THE PRESENCE OF THE PROJECT INSPECTOR.

SUSPENDED ACOUSTICAL CEILING NOTES — SCALE: NONE — 11

D-CL-0004 20100216

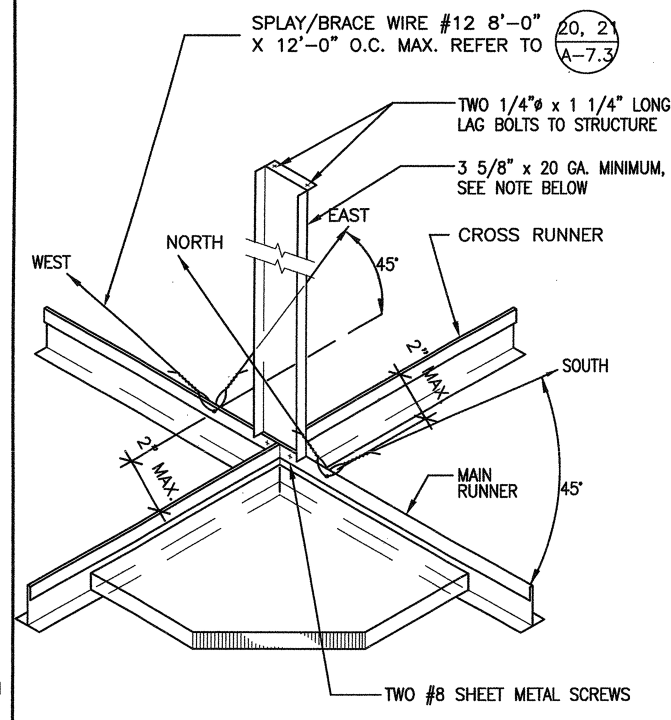

NOTE:

1. COMPRESSION STRUTS: STEEL SECTION WITH L/R RATIO OF 200 LBS MAXIMUM, STARTING NOT MORE THAN 4'-0" AWAY FROM TWO ADJACENT WALLS AND 6'-0" FROM TWO OTHER ADJACENT WALLS TO SUPPORT A TRIBUTARY AREA OF 96 SQ. FT. MAXIMUM AS SHOWN. ATTACH TO MAIN RUNNERS WITH MACHINE BOLTS AND TO STRUCTURE WITH 1/4" X 1 1/4" LG. LAG BOLTS. COMPRESSION STRUT SHALL NOT REPLACE HANGER WIRE.
2. PROVIDE HANGER WIRES FOR ALL MAIN RUNNERS AND CROSS RUNNERS WITHIN 8" OF CEILING PERIMETER.

COMPRESSION STRUT — SCALE: NONE — 12

D077

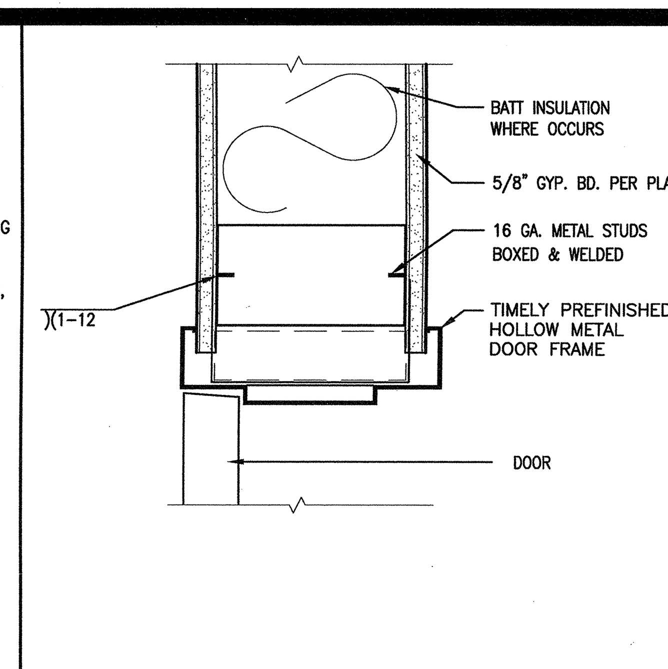

INTERIOR DOOR HEAD/JAMB — SCALE: 3"=1'-0" — 6

D070

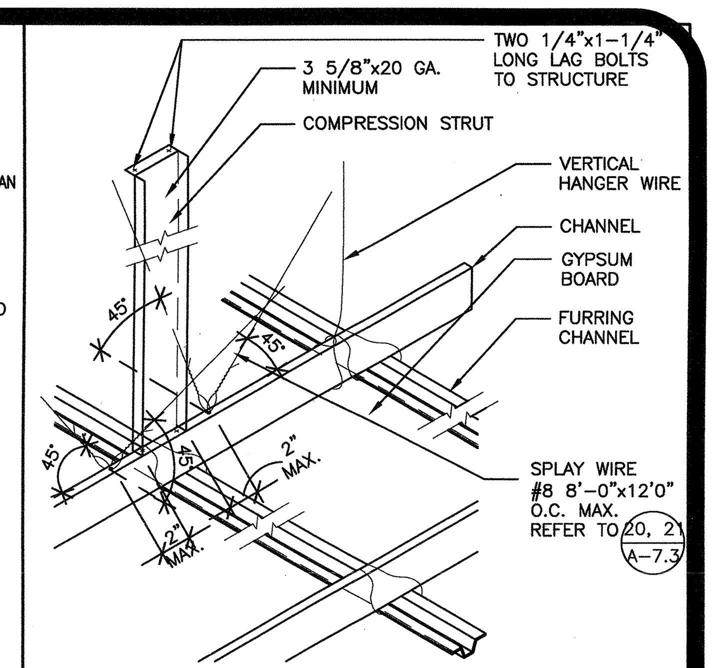

SUSPENDED GYP. BD. CLG. — SCALE: NONE — 7

D171

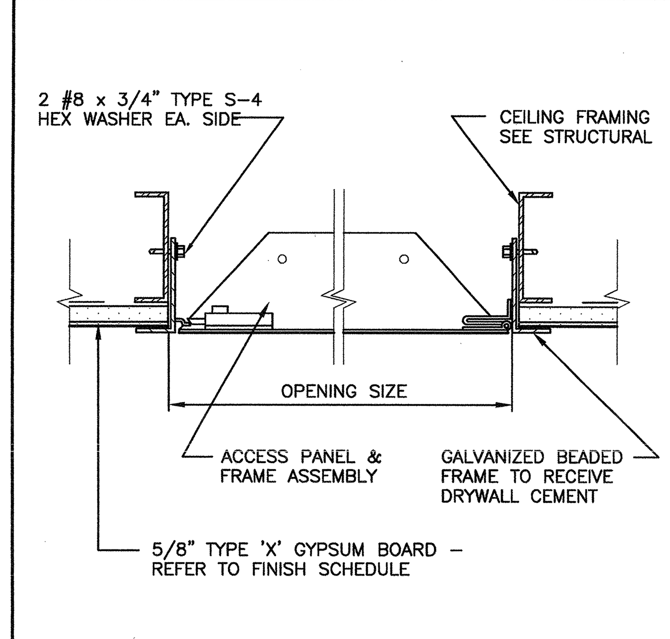

CEILING ACCESS PANEL — SCALE: 3"=1'-0" — 13

D188

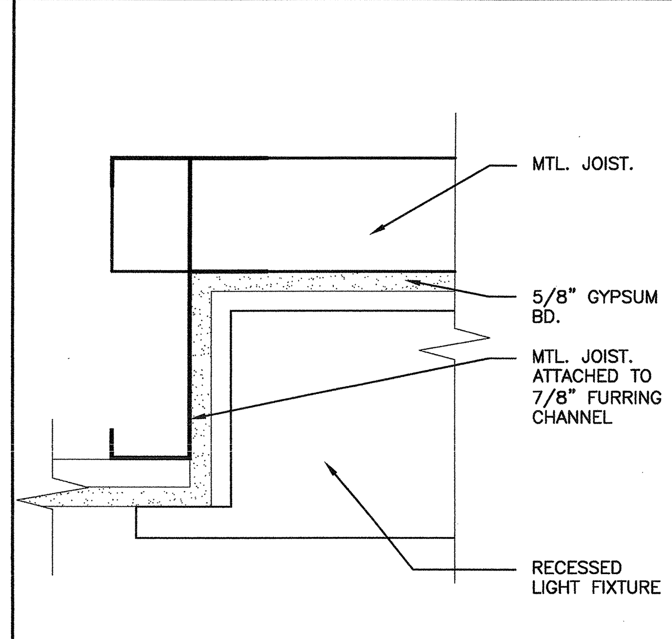

RECESSED LIGHT — SCALE: 3"=1'-0" — 14

D308

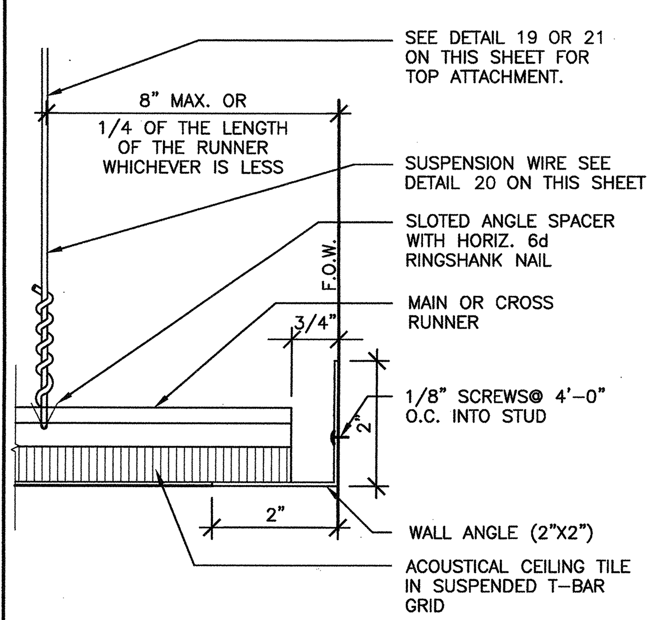

FREE END GRID — SCALE: 6"=1'-0" — 16

D-CL-0002

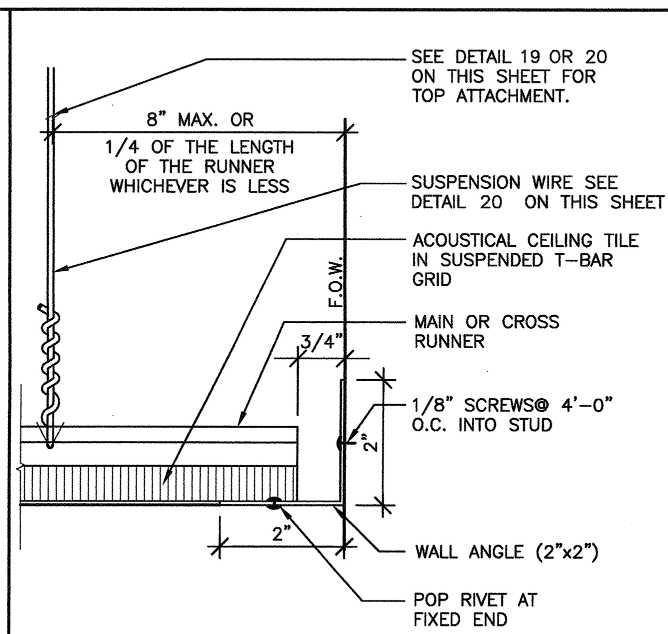

FIXED END GRID — SCALE: 6"=1'-0" — 17

D-CL-0003

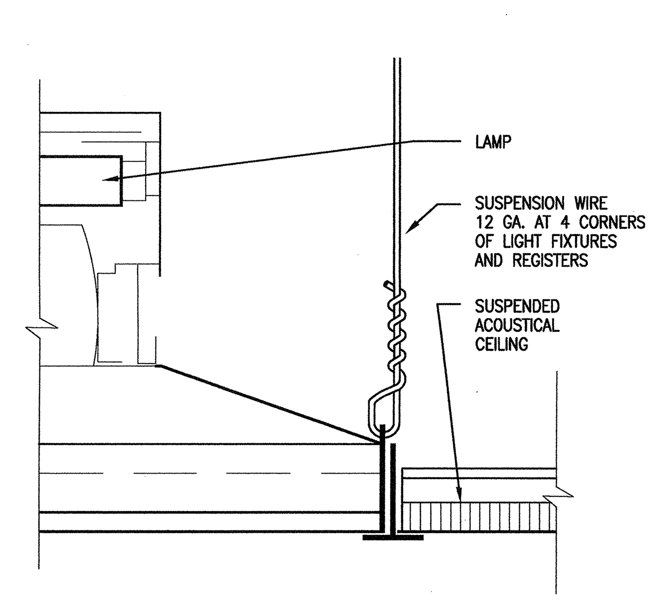

CEILING LIGHT SUSPENSION — SCALE: 6"=1'-0" — 18

D080

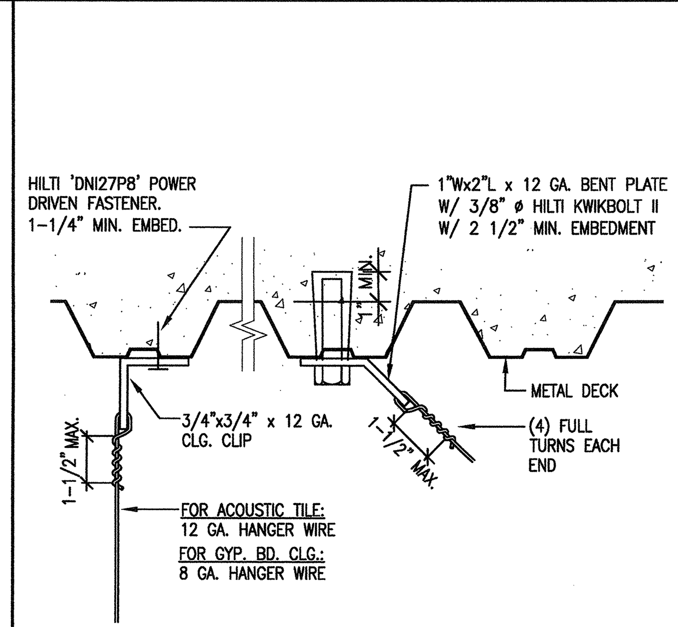

SUSPENDED WIRE CONNECTION — SCALE: 3"=1'-0" — 19

D081

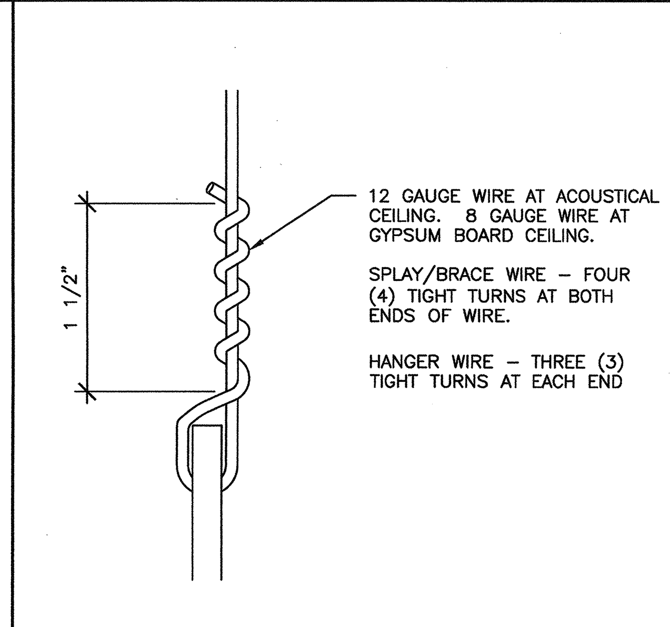

HANGER/SPLAY BRACE WIRE — SCALE: FULL — 20

D074

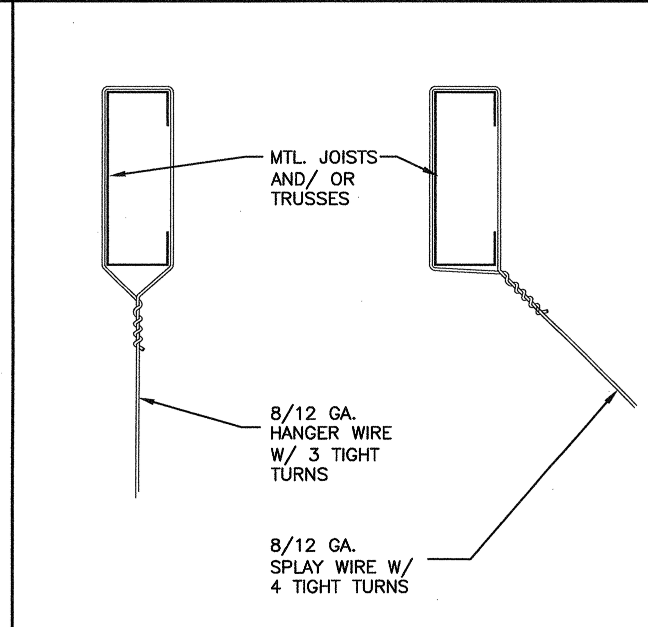

HANGER/SPLAY WIRE — SCALE: 3"=1'-0" — 21

D0418

DRYWALL CEILING SUSPENSION - CONVENTIONAL CONSTR. - ONE LAYER

A. GENERAL. GYPSUM BOARD SUSPENDED CEILING SYSTEMS SHOULD BE DESIGNED AND CONSTRUCTED IN ACCORDANCE WITH PROVISIONS OF TITLE 24, CCR, AND THE FOLLOWING INTERPRETATIONS MAY BE USED AS ADDITIONAL GUIDELINES.
B. MATERIALS. MATERIALS ARE TO COMPLY WITH APPLICABLE CBC STANDARDS. GYPSUM BOARD IS ONE LAYER OF 1/2" OR 5/8".
C. DESIGN. FOR LATERAL LOAD, USE SAME FACTORS AS FOR LAY-IN ACOUSTICAL TILE CEILING. USE 0.5 X 4#/SQ. FT. = 2#/SQ. FT. LATERAL LOAD FOR HOSPITALS.
D. DETAILS OF CONSTRUCTION
1. GENERAL. GYPSUM BOARD CEILINGS SHOULD NOT SUPPORT MATERIALS OR BUILDING COMPONENTS OTHER THAN GRILLS, LIGHT FIXTURES, SMALL ELECTRICAL CONDUITS, SMALL DUCTS AND THE LIKE. ALL SUCH COMPONENTS SHOULD BE SUPPORTED EITHER DIRECTLY FROM MAIN RUNNERS, OR BY SUPPLEMENTAL FRAMING WHICH IS SUPPORTED BY MAIN RUNNERS. NO VERTICAL LOADS OTHER THAN GYPBOARD DEAD LOAD SHOULD BE APPLIED TO CROSS-FURRING.
2. VERTICAL SUPPORT SYSTEM
a. THERE ARE MANY POSSIBLE VARIATIONS OF HANGER AND MAIN RUNNER SIZES AND SPACINGS LISTED IN TABLE NO. 25-A, TITLE 24, CCR, AND ALL OF THE COMBINATIONS ARE ACCEPTABLE. HOWEVER, BOTH HANGERS AND MAIN RUNNERS ARE MOST FREQUENTLY SPACED AT 4'-0" C.C. THIS IS ACCEPTABLE PROVIDED THE FOLLOWING REQUIREMENTS ARE MET:
i. VERTICAL HANGER WIRES ARE NO. 8 GA. AND GALVANIZED; HOWEVER, IF CEILING IS NON-ACCESSIBLE, A NO. 12 GA. WIRE MAY BE USED.
ii. MAIN RUNNERS ARE 1-1/2" CHANNELS, 1.12#/FT. MINIMUM, HOT ROLLED
iii. CROSS-FURRING MAY BE 7/8", 26 GA. GALV. HAT SECTIONS AT 24" MAXIMUM O.C.
b. THE FOLLOWING REQUIREMENTS APPLY TO ALL WIRE HANGER/RUNNER COMBINATIONS:
i. HANGERS SHOULD BE SADDLE-TIED AROUND MAIN RUNNERS TO DEVELOP THE FULL STRENGTH OF THE HANGERS.
ii. CROSS-FURRING SHOULD BE SADDLE-TIED TO THE MAIN RUNNERS WITH ONE STRAND OF NO. 16 OR TWO STRANDS OF NO. 18 GA. TIE WIRE.
iii. MAIN RUNNERS SHOULD BE SPLICED BY LAPPING AND INTERLOCKING FLANGES 12" MINIMUM AND TYING NEAR EACH END WITH DOUBLE LOOPS OF NO. 16 GA. WIRE.
iv. CROSS-FURRING SHOULD BE SPLICED BY LAPPING AND INTERLOCKING THE PIECES 8" MINIMUM AND TYING NEAR EACH END WITH DOUBLE LOOPS OF NO. 16 GA. WIRE.

E. LIGHT FIXTURE SUPPORT
1.. ALL RECESSED OR DROP-IN LIGHT FIXTURES SHOULD BE SUPPORTED DIRECTLY BY MAIN RUNNERS OR BY SUPPLEMENTAL FRAMING WHICH IS SUPPORTED BY MAIN RUNNERS.
2. SURFACE MOUNTED FIXTURES SHOULD BE ATTACHED TO A MAIN RUNNER WITH A POSITIVE CLAMPING DEVICE MADE OF MATERIAL WITH A MINIMUM OF 14 GA. ROTATIONAL SPRING CATCHES DO NOT COMPLY.
F. LATERAL SYSTEM
1. SEISMIC BRACE TO CEILING ABOVE AS FOR ACOUSTICAL TILE SUSPENSION SYSTEM. USE #12 DIAGONAL WIRES SPACED ON A 8' X 12' GRID FOR HOSPITAL AND WITHIN 6'-0" OF WALLS. SEISMIC BRACE TO BE LOCATED AT INTERSECTION OF MAINRUNNER AND CROSS-FURRING MEMBER. PROVIDE CONNECTION BETWEEN DIAGONAL WIRES AND MAIN RUNNER SO AS TO PREVENT SLIPPING FOR A 200# APPROXIMATE SEISMIC LOAD.
2. ALTERNATE SYSTEM - DESIGN AS A DIAPHRAGM, SIMILAR TO PLYWOOD DIAPHRAGM CONCEPT.
a. DIAPHRAGM RATIOS:
HORIZONTAL: 3 : 1
VERTICAL: 1-1/2 : 1
b. A MAXIMUM DIAPHRAGM SHEAR EQUAL TO 50 #/FT. IS ALLOWED WITH 1-1/4" HI-LO TYPE S OR S-12 BUGLE HEAD SCREWS AT 12" O.C. AT ALL GYPSUM BOARD EDGES AND INTERMEDIATE SUPPORTS. A WALL CONSTRUCTED SIMILARLY CAN RESIST THE SAME SHEAR FORCE PROVIDED THE GYPSUM BOARD IS ON THE SAME SIDE OF THE STUDS AS THE CEILING IS, AND A POSITIVE CONNECTION BETWEEN THE CEILING AND THE WALL IS DETAILED. THE GYPSUM BOARD DIAPHRAGMS ARE TO RESIST LATERAL LOADS DUE TO THEIR OWN WEIGHT AND/OR THE CEILING DIAPHRAGM(S) ONLY.
SUBSTITUTION OF 1" LONG SCREWS FOR 1-1/4" LONG SCREWS IS PERMITTED. 1-1/4" LONG SCREWS WERE LISTED BECAUSE IT WAS THE LENGTH MOST STOCKED BY THE INSTALLERS.
c. THE PROVISIONS OF PARAGRAPHS (b) 7, 8 AND 9 OF ACOUSTICAL CEILING NOTES APPLY TO SUSPEND DRYWALL CEILINGS ALSO.

SUSPENDED GYPSUM BOARD CEILING NOTES — SCALE: N.T.S. — 30

D404

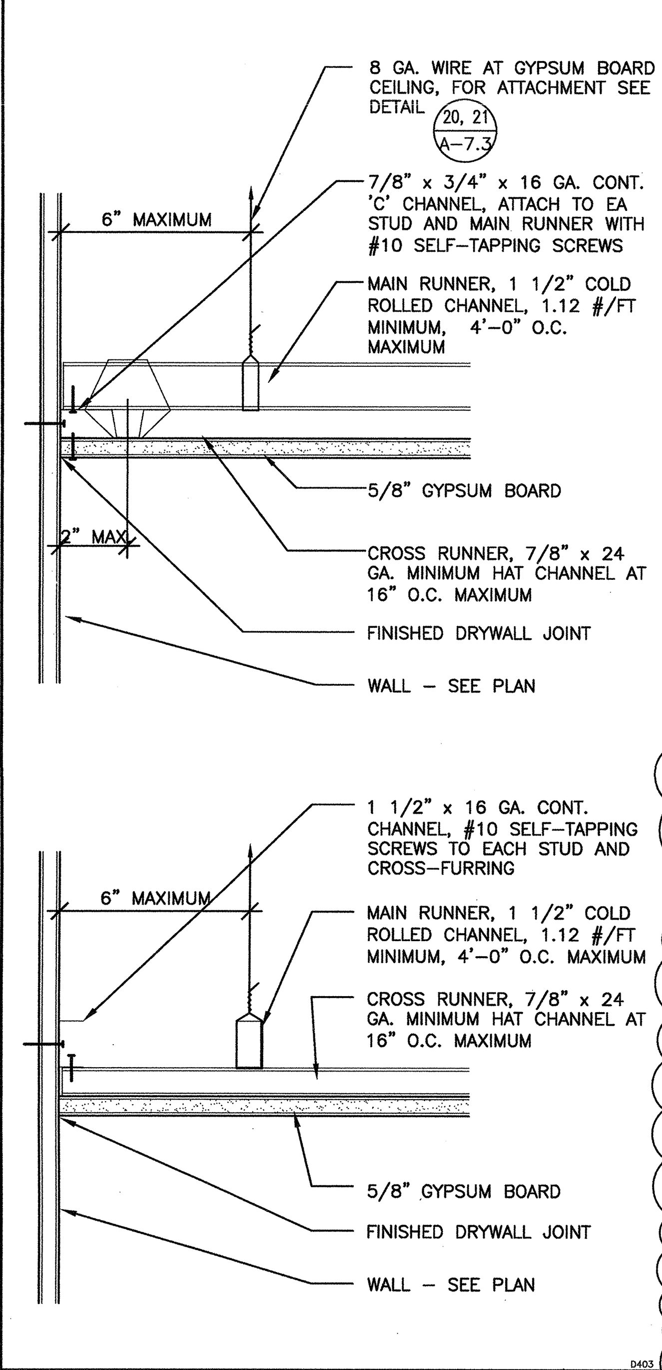

GYP. BD. CEILING AT WALL — SCALE: 3"=1'-0" — 31

D403

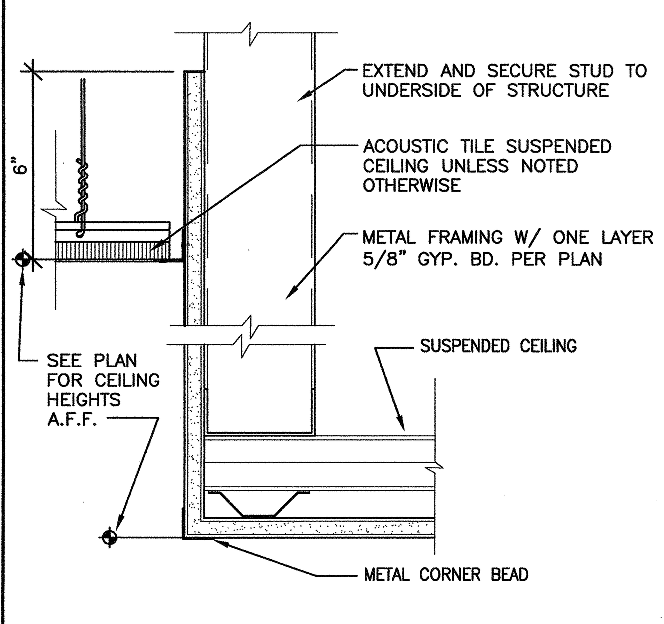

GYPSUM BOARD SOFFIT — SCALE: 3"=1'-0" — 24

D072A

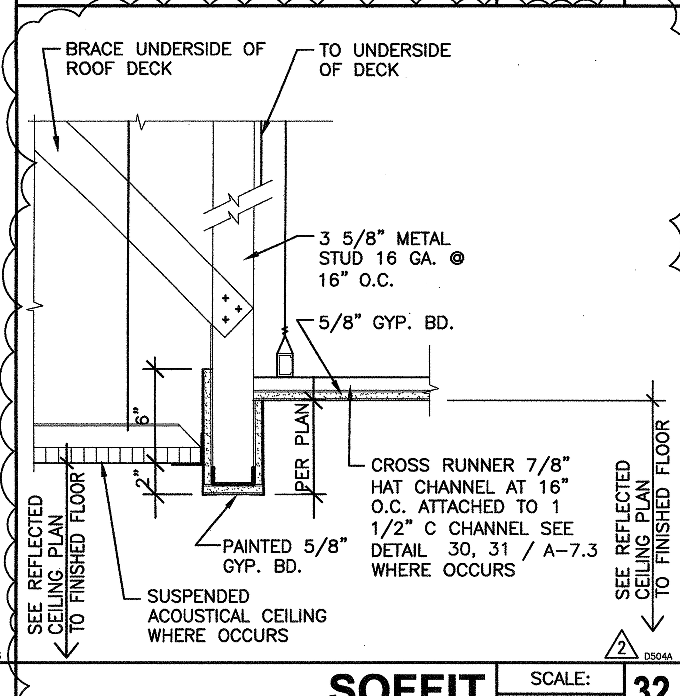

SOFFIT — SCALE: 1 1/2"=1'-0" — 32

D504A 20100403

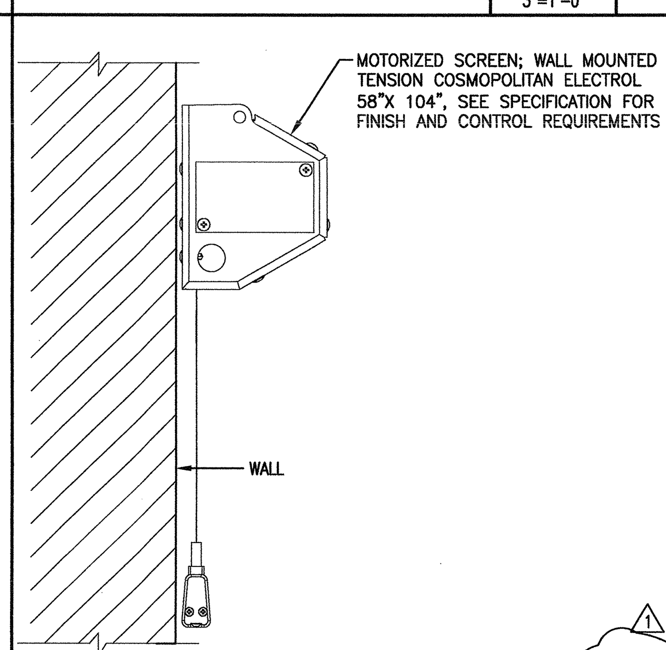

PROJECTION SCREEN — SCALE: 3"=1'-0" — 26

D-MD-0008 20100224

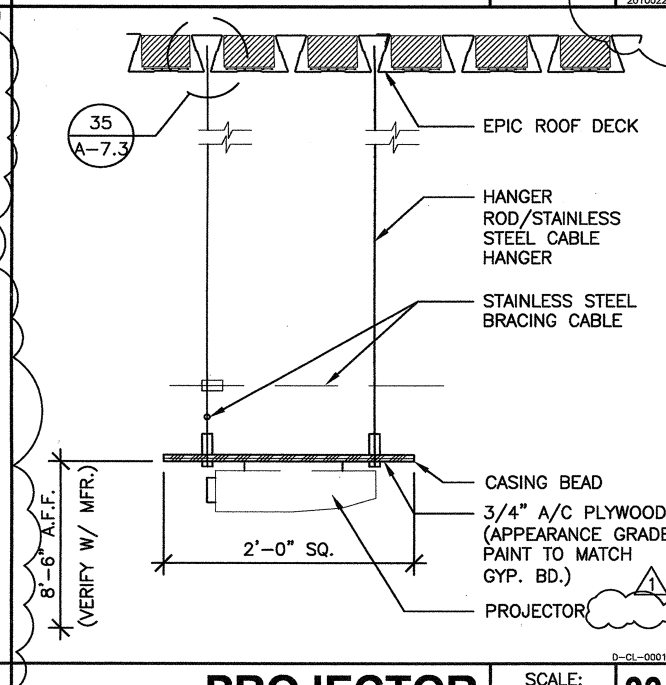

PROJECTOR — SCALE: 1"=1'-0" — 33

D-CL-0001 20100225

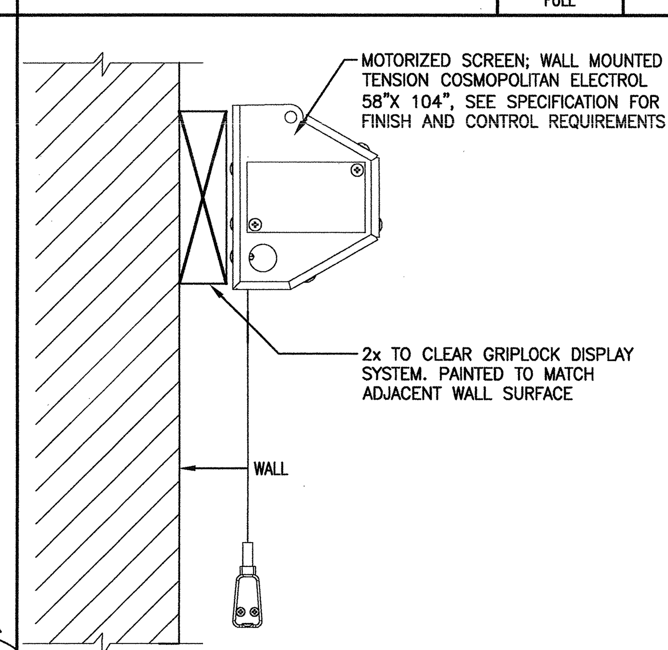

PROJECTION SCREEN — SCALE: 3"=1'-0" — 27

D-MD-0004 20100224

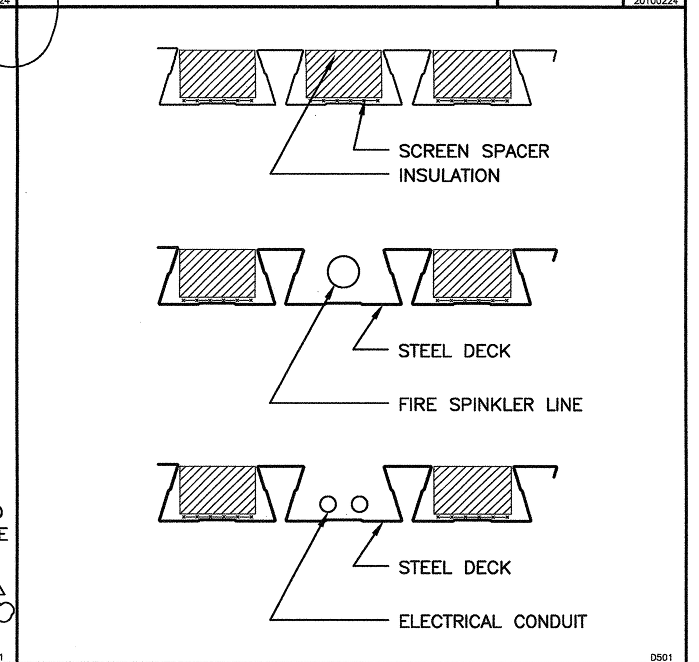

DECK DETAIL — SCALE: 1 1/2"=1'-0" — 34

D501

ER3.5 AND ER3.5A ROOF DECK HANGER INSTALLATION RECOMMENDATIONS

1. NOTE TO PURCHASER: PROVIDE A COPY OF THESE INSTRUCTIONS TO ALL FIELD INSTALLATION PERSONNEL.
2. NOTES TO INSTALLER
A. INSERT THE HANGER UP INTO THE DOVETAIL RIB, ROTATE THE HANGER FULLY 90°, AND THEN PULL DOWN TO SEAT HANGER.
B. AFTER THE ANKORE™ HANGER IS PROPERLY SEATED, INSTALL AN ANKORE™ LOCK, ™
/TEND UP INTO THE KEYSTONE SHAPED DECK RIB AND STRADDLE ™
C. FASTEN ER3.5 ROOF DECK TO ALL SUPPORTS WITH A MINIMUM 24/3 PATTERN.
D. DO NOT PLACE HANGERS CLOSER TOGETHER THAN 8'-0 CENTER TO CENTER ALONG THE SAME DECK RIB.
E. HANGERS ARE DESIGNED FOR VERTICAL STATIC LOADING ONLY!
F. HANGING LOADS MUST NOT EXCEED THE LOAD CARRYING CAPACITY OF THE ER3.5 ROOF DECK.
G. EPIC DOES NOT RECOMMEND PLACEMENT OF HANGERS AT DECK SIDE LAPS DUE TO VARIANCE IN RIB WIDTH.
H. UNLESS OTHERWISE NOTED, THE WASHERS, THREADED RODS, AND NUTS ARE NOT SUPPLIED BY EPIC (N.B.E.)
I. FOR HANGING HEAVY-DUTY LOADS OR SPRINKLER PIPES CONTACT EPIC METALS FOR DRAWING NUMBER "EHI7".

WARNING: FAILURE TO ADHERE TO THE ABOVE NOTES MAY CAUSE HANGERS TO PULL OUT OF DECK RIBS.

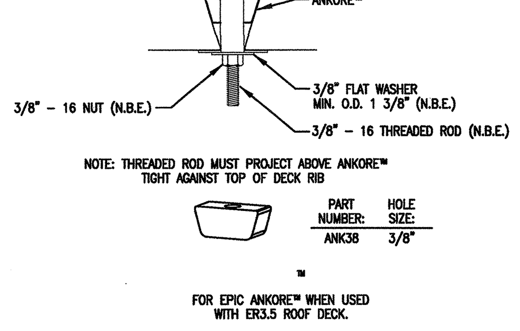

NOTE: THREADED ROD MUST PROJECT ABOVE ANKORE™ TIGHT AGAINST TOP OF DECK RIB

PART NUMBER:	HOLE SIZE:
ANK38	3/8"

™

FOR EPIC ANKORE™ WHEN USED WITH ER3.5 ROOF DECK.

75 # WORKING LOAD - 19 GA. DECK
100 # WORKING LOAD - 18 GA. DECK
100 # WORKING LOAD - 17 GA. DECK
100 # WORKIN`

HANGER DETAIL — SCALE: 3"=1'-0" — 35

D502

County of Orange
OC PUBLIC WORKS
Architecture & Engineering

Sym.	Descrip.	Date	By
1	ADDENDUM 2	MARCH 2, 2010	DOF
2	ADDENDUM 3	APRIL 5, 2010	DOF

0742 Revisions

Consultants — Drawn — Chkd. — Date

A-E Seal: LICENSED ARCHITECT ALLEN L. HIBBS NO. C10511 REN.7/31/2011 STATE OF CALIFORNIA

A-E ALEXANDER + HIBBS, AIA, INC.
ALEXANDER + HIBBS, AIA, INC. Architecture and Planning 1200 N. JEFFERSON ST. SUITE A ANAHEIM, CALIFORNIA 92807 (714) 630-3666

Design DA, MS — Chkd. AH — Date Nov. 26, 2009

Sht Title DETAILS
Project COUNTY OF ORANGE HEALTH CARE AGENCY 401 SOUTH TUSTIN STREET
401 SOUTH TUSTIN STREET ORANGE, CA 92866
PROJ. NO. 100-042-P210-4200

Plan No. 52333-03608
Sheet A-7.3