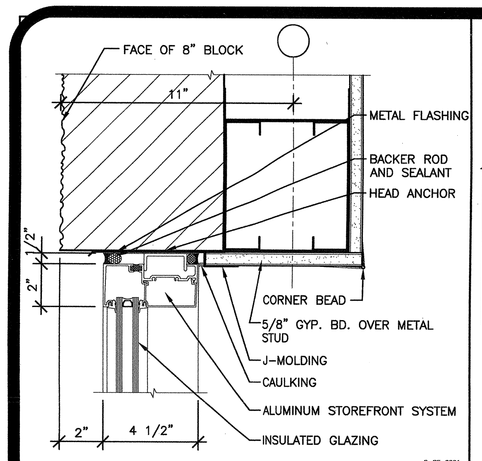

STOREFRONT HEAD @ CMU WALL | SCALE: 3"=1'-0" | 1

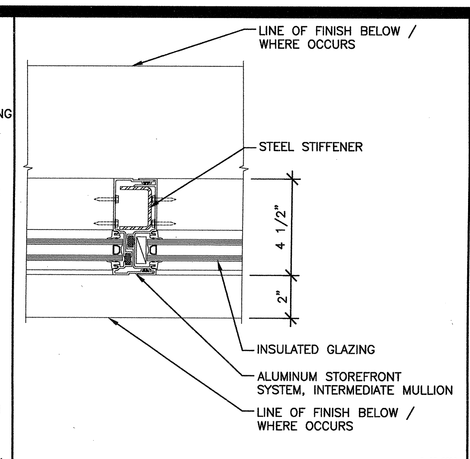

STOREFRONT INTER. VERT. | SCALE: 3"=1'-0" | 2

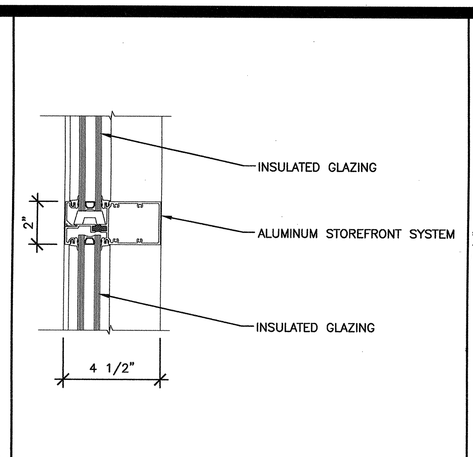

STOREFRONT INTER. HORIZ. | SCALE: 3"=1'-0" | 3

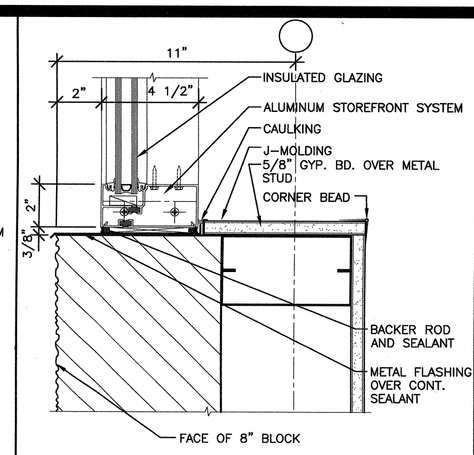

STOREFRONT JAMB @ CMU WALL | SCALE: 3"=1'-0" | 4

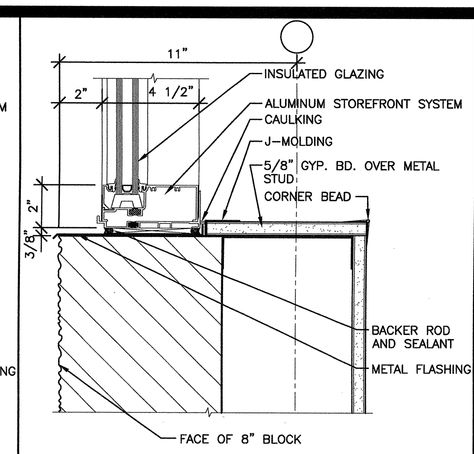

STOREFRONT SILL @ CMU WALL | SCALE: 3"=1'-0" | 5

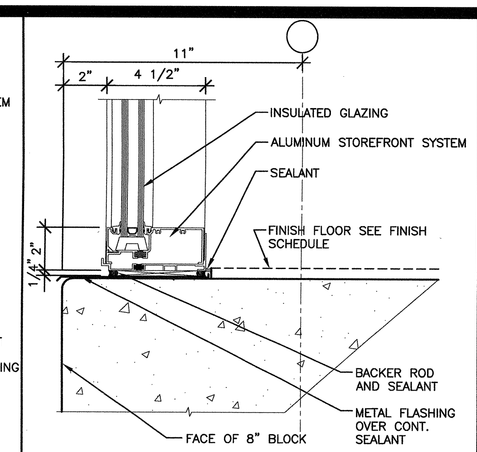

STOREFRONT SILL @ CONCRETE | SCALE: 3"=1'-0" | 6

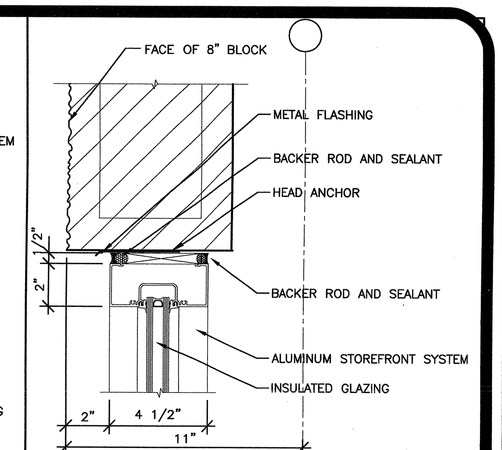

TRANSOM HEAD | SCALE: 3"=1'-0" | 7

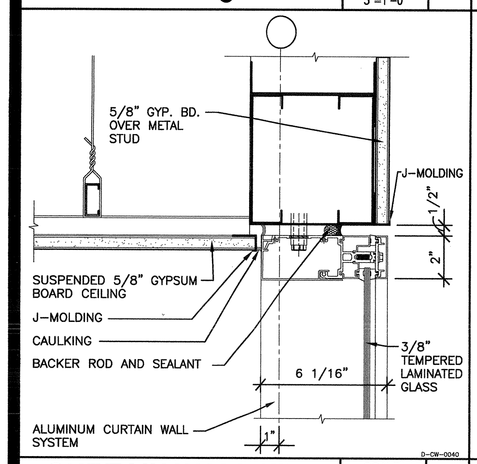

CURTAIN WALL HEAD | SCALE: 3"=1'-0" | 8

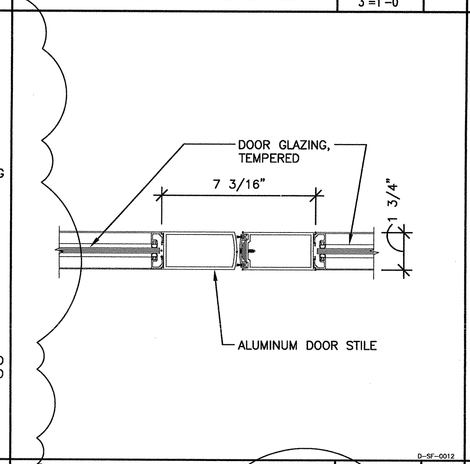

DOOR MEETING STILE | SCALE: 3"=1'-0" | 9

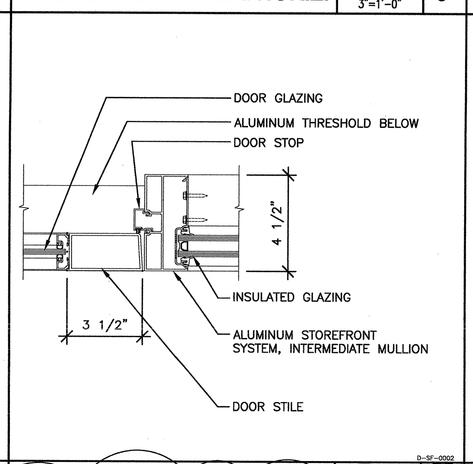

DOOR JAMB | SCALE: 3"=1'-0" | 10

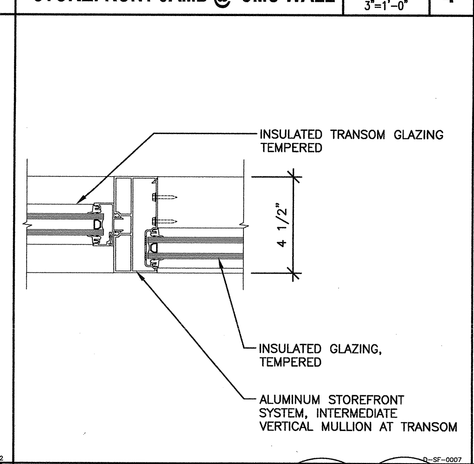

TRANSOM JAMB | SCALE: 3"=1'-0" | 11

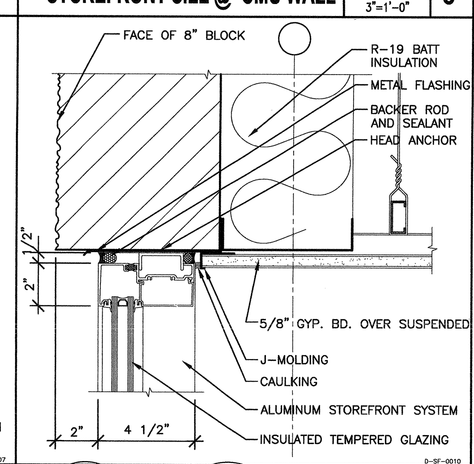

STOREFRONT HEAD | SCALE: 3"=1'-0" | 12

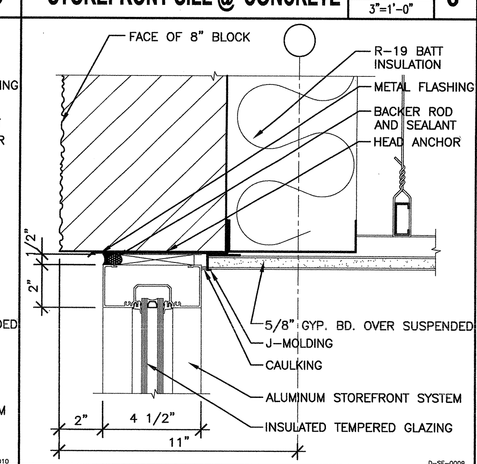

TRANSOM @ CMU | SCALE: 3"=1'-0" | 13

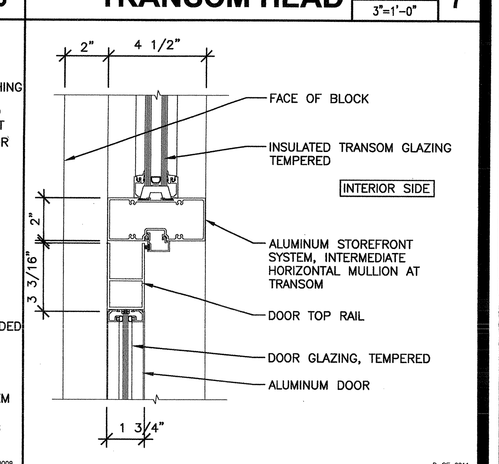

DOOR HEAD/TRANSOM SILL | SCALE: 3"=1'-0" | 14

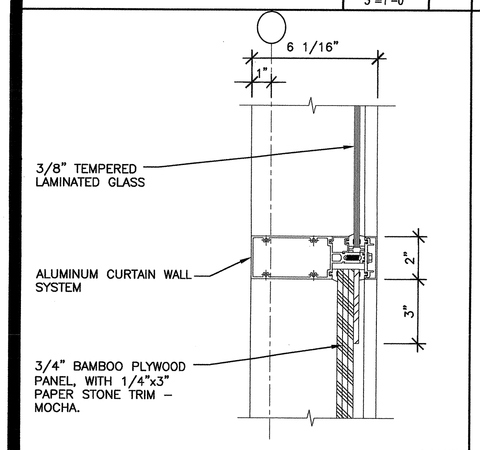

CURTAIN WALL INTER. HORIZ. | SCALE: 3"=1'-0" | 15

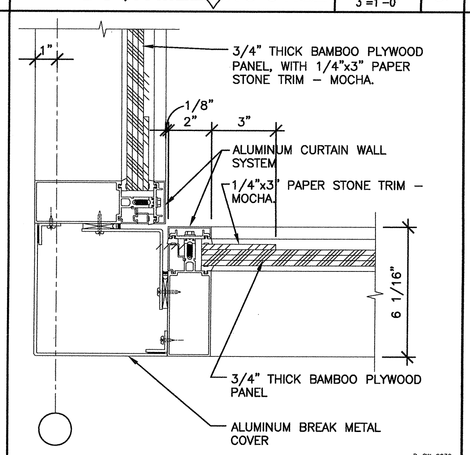

CURTAIN WALL CORNER. | SCALE: 3"=1'-0" | 16

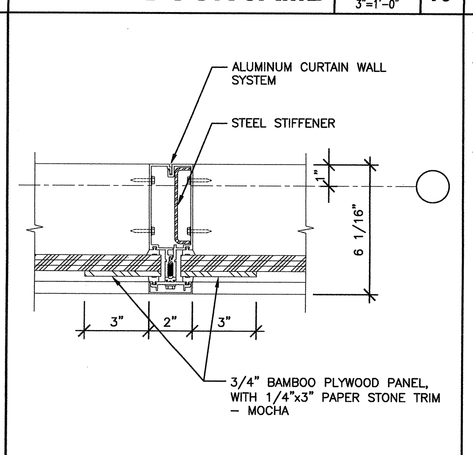

CURTAIN WALL INTER. VERT. | SCALE: 3"=1'-0" | 17

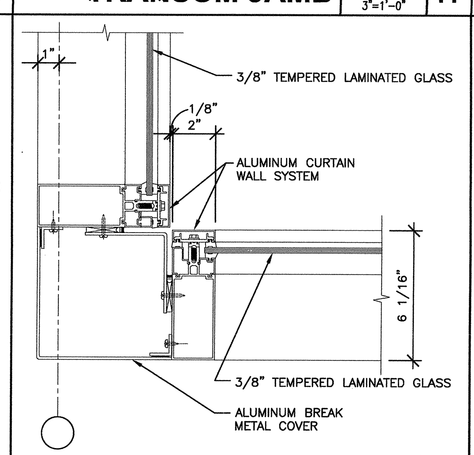

CURTAIN WALL CORNER. | SCALE: 3"=1'-0" | 18

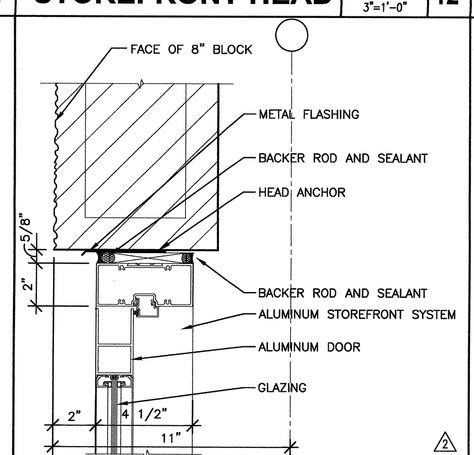

DOOR HEAD | SCALE: 3"=1'-0" | 19

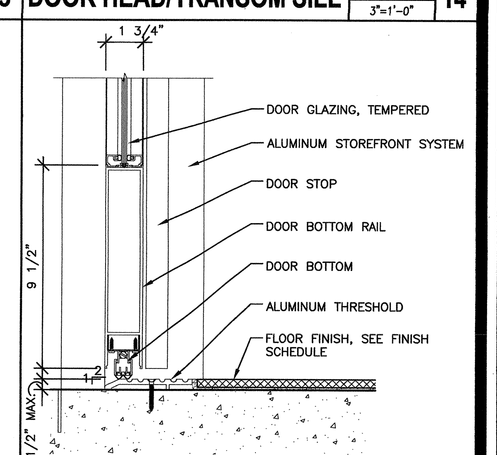

DOOR BOTTOM | SCALE: 3"=1'-0" | 21

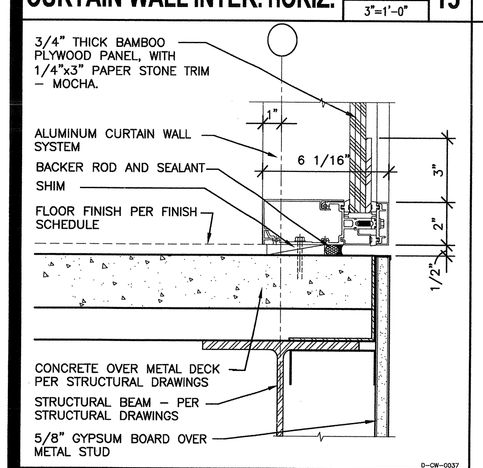

CURTAIN WALL SILL @ CONC. DECK | SCALE: 3"=1'-0" | 22

0742 COUNTY OF ORANGE HEALTH CARE AGENCY 401 SOUTH TUSTIN STREET

County of Orange
OC PUBLIC WORKS
Architecture & Engineering

Revisions

Sym.	Descrip.	Date	By
0742	ADDENDUM 3	APRIL 5, 2010	DOF

Consultants

Drawn ___ Chkd. ___ Date ___

A-E Seal

LICENSED ARCHITECT — STEPHEN L. HIBBS — NO. C-13472 — REN. 12/31/2010 — STATE OF CALIFORNIA

A-E ALEXANDER + HIBBS, AIA, INC.

ALEXANDER + HIBBS, AIA, INC.
1300 S. COTTONWOOD AVENUE
TUSTIN, CALIFORNIA 92680
(714) 544-3488

Nov. 26, 2009

Design DA, MS | Chkd. AH | Date

Sht Title DETAILS

Project COUNTY OF ORANGE HEALTH CARE AGENCY
401 SOUTH TUSTIN STREET

401 SOUTH TUSTIN STREET
ORANGE, CA 92866

PROJ. NO. 100-042-P210-4200

Plan No.
52333-03608

Sheet
A-7.9